STATE OF CALIFORNIA—HEALTH AND HUMAN SERVICES AGENCY

# Department of Health Services

# APPROVED BACKFLOW PREVENTION ASSEMBLIES FOR SERVICE ISOLATION

## INTRODUCTION

The California Code of Regulations (CCR), requires public water systems to protect their water supplies from contamination by implementing a cross-connection control program. The scope of a comprehensive cross-connection control program must include provisions for the protection of the drinking water supply through the installation of appropriate backflow prevention assemblies at all water user's connections where a hazard or potential hazard to the water supply is identified by the public water system (Title 17, Section 7584). The type of backflow protection required must be commensurate with the degree of hazard that exists on the water user's premises. The state regulations identify the minimum types of backflow protection based on the identified hazard or potential hazard. (Title 17, Section 7604).

The types of backflow protection assemblies recognized by the Department of Health Services (Department) include: Double Check Valve (DC), Reduced Pressure Principle (RP), Double Check Detector (DCDA), and Reduced Pressure Detector (RPDA) Assemblies.

Backflow prevention assemblies that fail the annual testing protocol and are identified as defective, must be replaced with a currently approved assembly or repaired with approved spare parts.

This publication supersedes all previously issued Backflow Protection Assembly Approval Lists, updates and/or editions and shall remain in effect until further notice.

For additional information and questions regarding this list, please contact the Department of Health Services at (916) 449-5600.

## AIR-GAP SEPARATION

DEFINITION:

An Air-gap (AG) Separation is a physical break between the supply line and a receiving vessel. (*California Code of Regulations (CCR), Title 17, Section 7583(c)*).

CONSTRUCTION AND INSTALLATION SPECIFICATIONS:

An Air-Gap separation shall be at least double the diameter of the supply pipe, measured vertically from the flood rim of the receiving vessel to the supply pipe; however, in no case the separation shall be less than one inch. (*CCR, Title 17, Section 7602(a)*).

An Air-Gap separation shall be located as close as practical to the user's connection and all piping between the user's connection and the receiving tank shall be entirely visible unless otherwise approved in writing by the water supplier and the health agency. (*CCR, Title 17, Section 7503(a)*).

## DOUBLE CHECK VALVE ASSEMBLIES

DEFINITION:

A Double Check Valve Assembly (DC) is an assembly of at least two independently acting check valves including tightly closing shut-off valves on each side of the check valve assembly and test cocks available for testing the watertightness of each check valve. (*CCR, Title 17, Section 7583(f)*).

A Double Check Detector Assembly (DCDA) is configured the same as the Double Check Assembly, with the exception that it is equipped with a bypass-detector that allows the visual inspection of flow through the assembly.

CONSTRUCTION AND INSTALLATION SPECIFICATIONS:

A required Double Check Vale Assembly, as a minimum, must conform to the AWWA Standard C506-78 (R83) adopted on January 28, 1978 for Double Check Valve Type Backflow Preventive Devices. (*CCR, Title 17, Section 7602 (b)*).

A Double Check Valve Assembly shall be located as close as practical to the user's connection and shall be installed above grade, if possible, and in a manner where it is readily accessible for testing and maintenance. (*CCR, Title 17, Section 7603 (b)*). Figure No. 1 shows a Double Check schematic.

DOUBLE CHECK VALVE ASSEMBLY

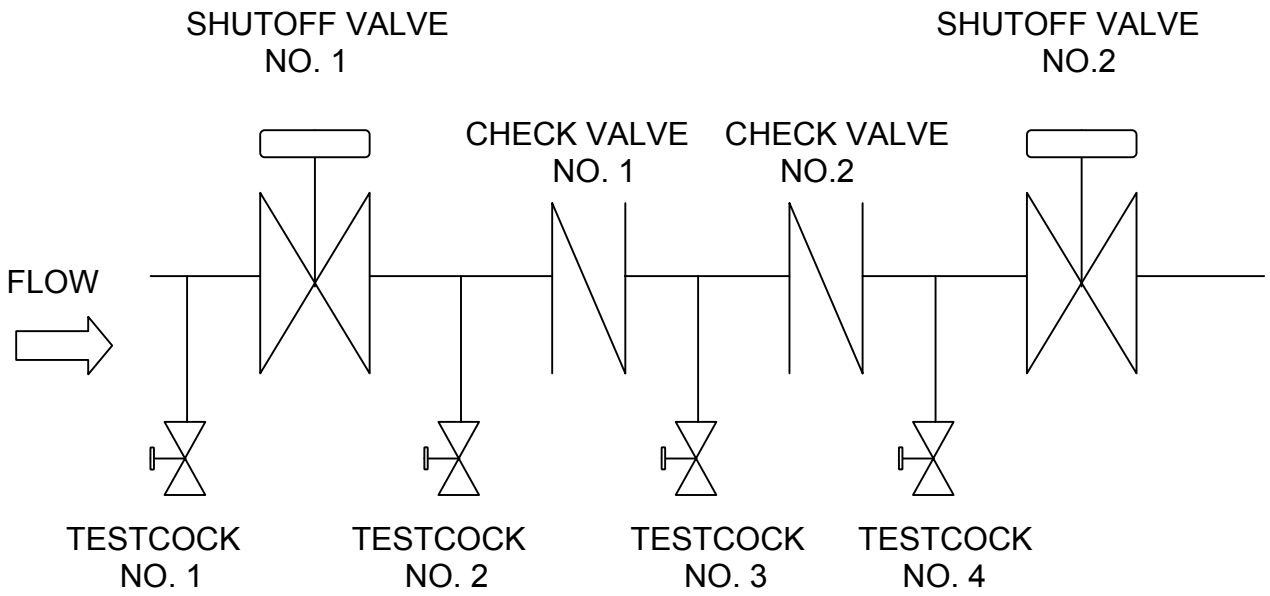


## REDUCED PRESSURE PRINCIPLE ASSEMBLIES

DEFINITION:

Reduced Pressure Principle Backflow Prevention Assembly (RP) is a backflow preventer incorporating not less than two check valves, an automatically operated differential relief valve located between the two check valves, a tightly closing shut-off valve on each side of the check valve assembly, and is equipped with the necessary test cocks for testing. (*CCR, Title 17, Section 7583 (j)*).

A Reduced Pressure Principle Detector Assembly (RPDA) is configured the same as the Reduced Pressure Principle Assembly, with the exception that it is equipped with a by pass-detector that allows the visual inspection of flow through the assembly.

CONSTRUCTION AND INSTALLATION SPECIFICATIONS:

A required Reduced Pressure Principle Backflow Prevention Assembly shall, as a minimum conform to the AWWA Standard C506-78 (R 83) adopted on January 28, 1978 for Reduced Pressure Type Backflow Prevention Devices. (*CCR, Title 17, Section 7602(c)*).

A Reduced Pressure Principle Backflow Prevention Assembly shall be located as close as practical to the user's connection and shall be installed a minimum of twelve inches (12") above grade and not more than thirty-six inches (36") above grade measured from the bottom of the device and with a minimum of twelve inches (12") side clearance. (*CCR, Title 17, Section 7603 (c)*). Figure No. 2 shows a RP schematic.
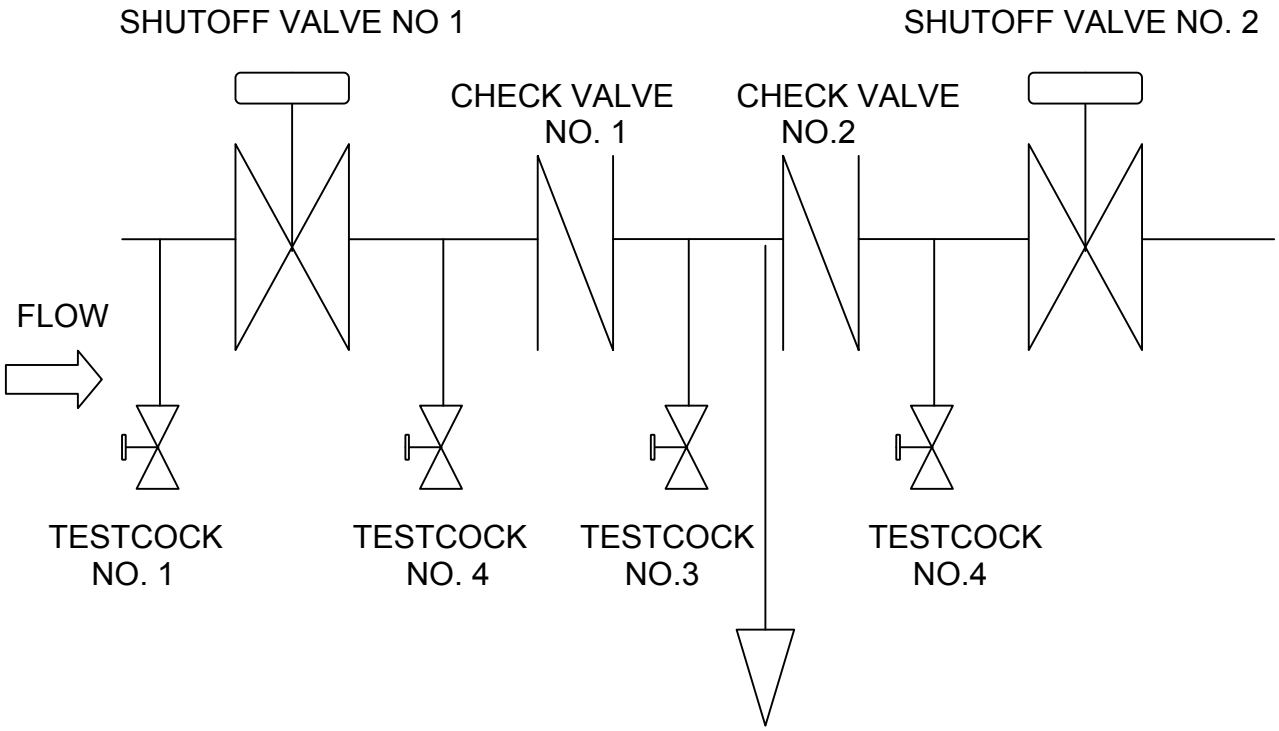
REDUCED PRESSURE PRINCIPLE ASSEMBLY